TACT SWITCH

SDTST-6 SERIES

6x6
Radial Taping Type

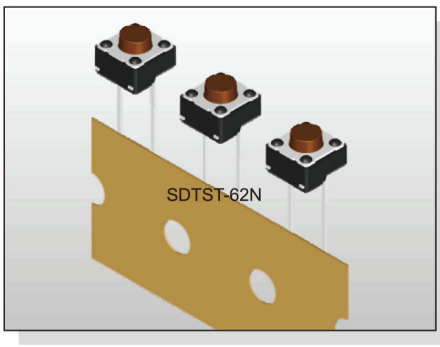

FEATURES

※Radial taping type
※Variety of actuator lengths
※Allow automatic insertion onto PCB.

APPLICATION

※White goods , OA equipment
※Audio, DVD player, TV
※Instrumentation

SPECIFICATION

Contact Rating	50mA, 12V DC
Contact Resistance	100mΩ max.
Insulation Resistance	100MΩ min. 500V DC
Dielectric Strength	250V AC/1 minute
Operating Force	100±50gf, Black(K) 160±50gf, Brown(N) 260±50gf, Red(R) 320±80gf, Salmon(S) 520±130gf, Yellow(Y)
Travel	0.25mm
Operating Life	Phosphor Bronze Dome 50,000 cycles for 520/320gf 100,000 cycles for 260gf 200,000 cycles for 160/100gf Stainless Steel Dome 300,000 cycles for 520/320gf 500,000 cycles for 260gf 1,000,000 cycles for 160/100gf
Operating Temp.	-25°C ~ +70°C
Storage Temp.	-30°C ~ +80°C

HOW TO ORDER

S D T S T - 6 □ □ - □ - □

Radial Taping Type

Height:
1=4.30mm
2=5.00mm
3=7.00mm
44=7.30mm (SQ.)x2.40mm
48=7.30mm (SQ.)x2.80mm
5=9.50mm
6=13.00mm

Operating Force:
K=Black, 100gf
N=Brown, 160gf
R=Red, 260gf
S=Salmon, 320gf
Y=Yellow, 520gf

□=Phosphor Bronze Dome
S=Stainless Steel Dome

V=RoHS & Lead Free Solderable
Q=Halogen Free

CIRCUIT

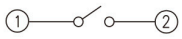

PACKAGE

<Box>
900 pcs

TACT SWITCH

SDTST-6

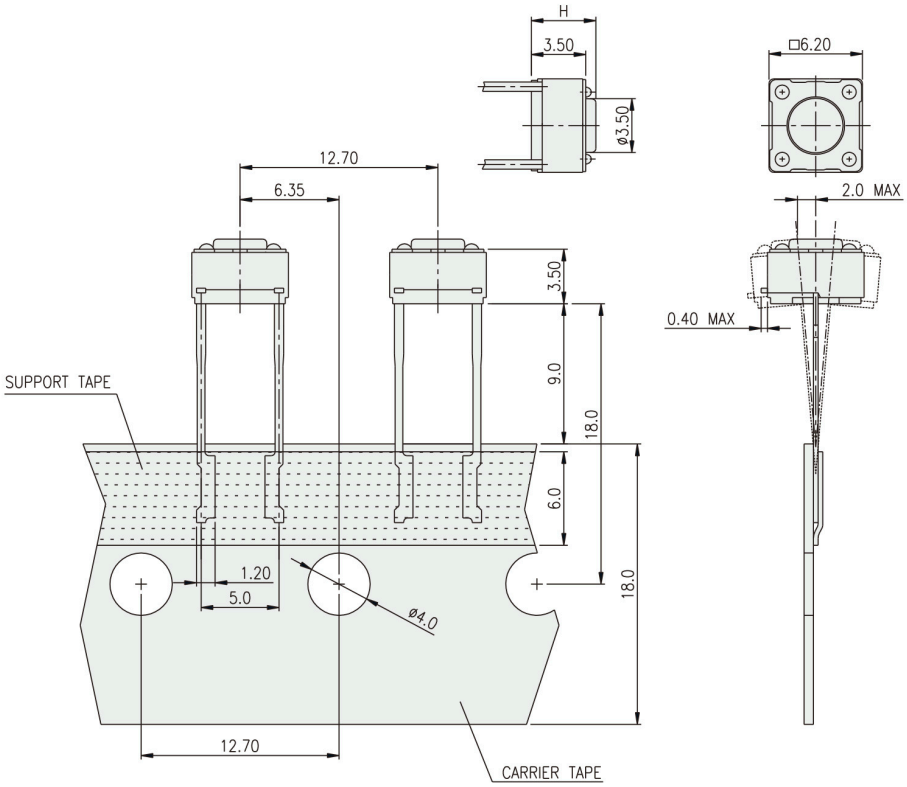

PART NO.	H
SDTST-61	4.30
SDTST-62	5.00
SDTST-63	7.00
SDTST-644	7.30(SQ.2.40)
SDTST-648	7.30(SQ.2.80)
SDTST-65	9.50
SDTST-66	13.00

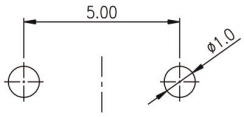

P.C.B. LAYOUT