TACT SWITCH

STAE SERIES

3.8x6 Thinner Type Tactile Switch

2018

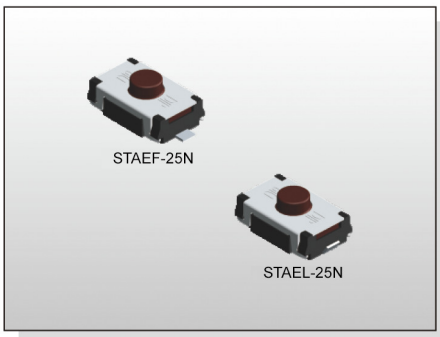

FEATURES

※3.8x6mm of thinner type 2.5mm height
※Soft actuator with long travel
※Choice of actuation force

APPLICATION

※Car remote control
※Audio, OA equipment
※Instrumentation

SPECIFICATION

Contact Rating	50mA, 12V DC
Contact Resistance	100mΩ max.
Insulation Resistance	100MΩ min. 100V DC
Dielectric Strength	300V AC/1 minute
Operating Force	200gf, Brown(N) 300gf, Red(R) 450gf, Salmon(S)
Travel	0.30mm, Brown(N) 0.35mm, Red(R) 0.45mm, Salmon(S)
Operating Life	100,000 cycles (S) 200,000 cycles (N/R)
Operating Temp.	-40°C ~ +85°C
Storage Temp.	-40°C ~ +85°C

HOW TO ORDER

STAE □ - □□ □ □ - □ - □

- F=Flat, L=J Bend
- Dimension H: 25=2.50mm
- Operating Force: N=Brown, 200gf; R=Red, 300gf; S=Salmon, 450gf
- □=Plating Silver, A=Plating Gold
- V=RoHS & Lead Free Solderable, Q=Halogen Free
- Package: T/R=Tape & Reel

CIRCUIT

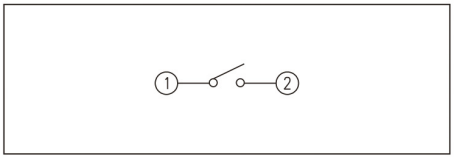

PACKAGE

<Tape & Reel>
2700 pcs

TACT SWITCH

STAEF-25

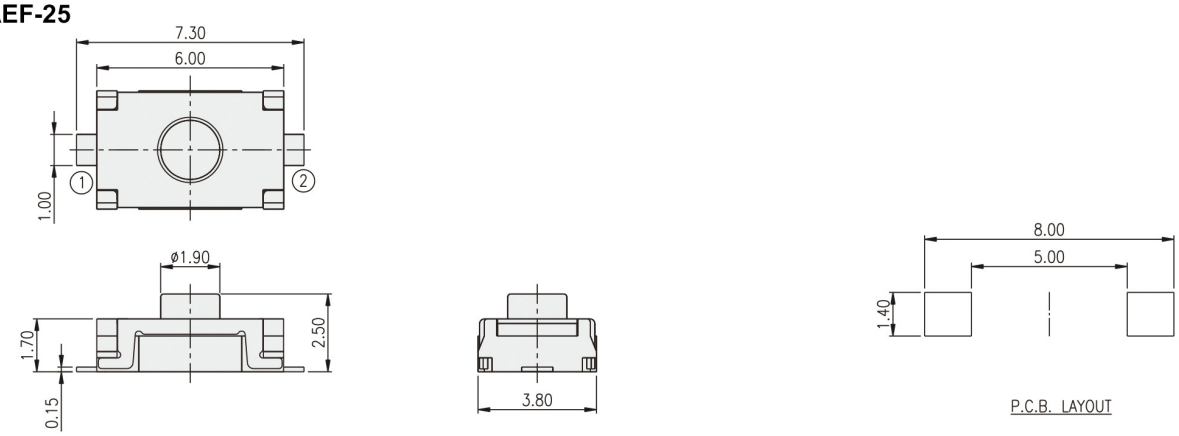
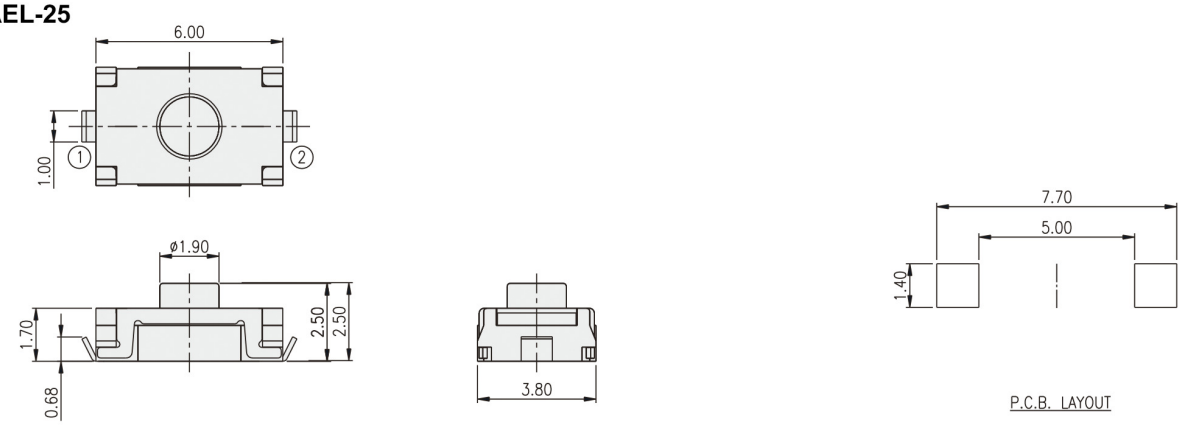
STAEL-25